Roughneck® Connectors

COOPER Interconnect

DOUBLE HOLE BUS BAR			
*COLOR	FEMALE COMPLETE RECEPTACLE ASSEMBLY	SHELL ASSEMBLY	FEMALE CONTACT ASSEMBLY
Black	E1049-1833X-BK	3326695-1	A201108-9
Yellow	E1049-1834X-Y	3326695-2	A201108-10
Red	E1049-1835X-R	3326695-3	A201108-11
Orange	E1049-1836X-OR	3326695-4	A201108-12
Green	E1049-1837X-G	3326695-5	A201108-13
White	E1049-1838X-W	3326695-6	A201108-14
Blue	E1049-1839X-BL	3326695-7	A201108-15
Brown	E1049-1840X-BR	3326695-8	A201108-16

DOUBLE HOLE BUS BAR			
*COLOR	MALE COMPLETE RECEPTACLE ASSEMBLY	SHELL ASSEMBLY	MALE CONTACT ASSEMBLY
Black	E1049-1808X-BK	3326695-1	A201099-9
Yellow	E1049-1809X-Y	3326695-2	A201099-10
Red	E1049-1810X-R	3326695-3	A201099-11
Orange	E1049-1811X-OR	3326695-4	A201099-12
Green	E1049-1812X-G	3326695-5	A201099-13
White	E1049-1813X-W	3326695-6	A201099-14
Blue	E1049-1814X-BL	3326695-7	A201099-15
Brown	E1049-1815X-BR	3326695-8	A201099-16

Available in aluminum. Consult factory for details.
Receptacle assembly part numbers include the insulator, receptacle housing, gasket and dust cover.
Dust cover receptacle male or female part number A201113-5.

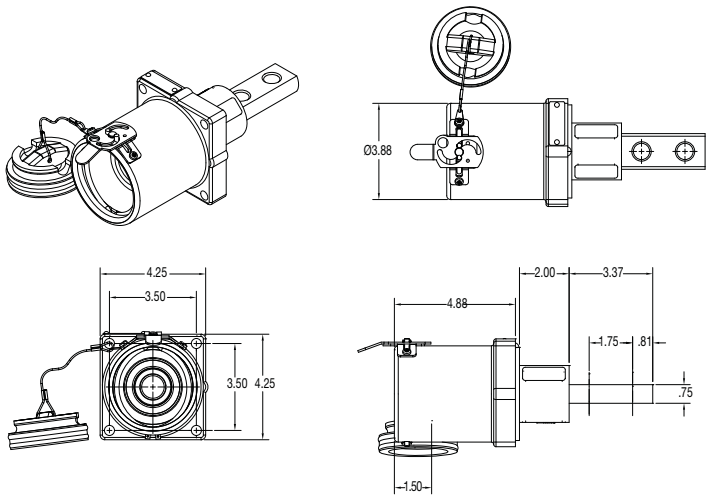

MALE RECEPTACLE DOUBLE HOLE

ROUGHNECK E1049 SERIES

For use with single conductor for 313-777 MCM cable

Technical Specifications

Voltage Rating: 1,000 Max.

Amperage Rating: 1,135 max.